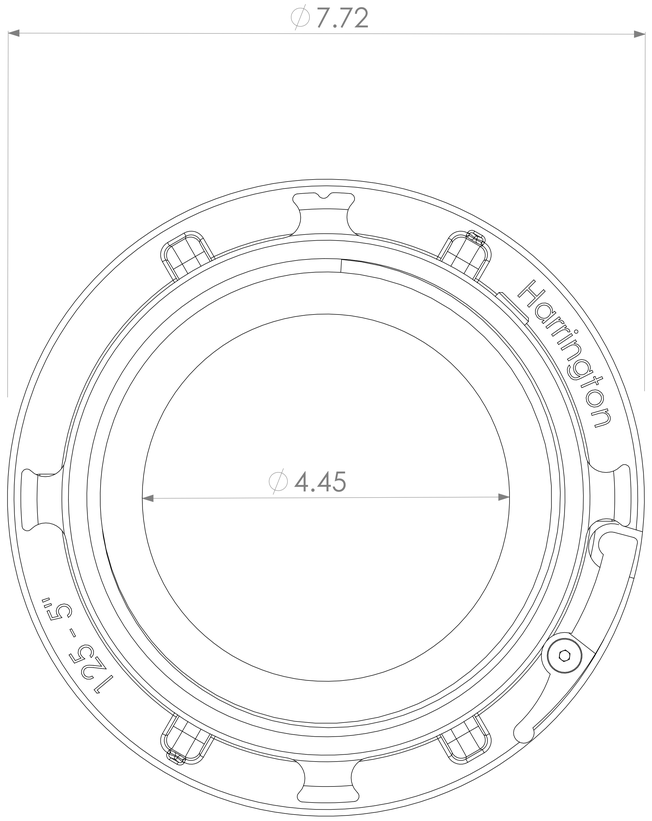

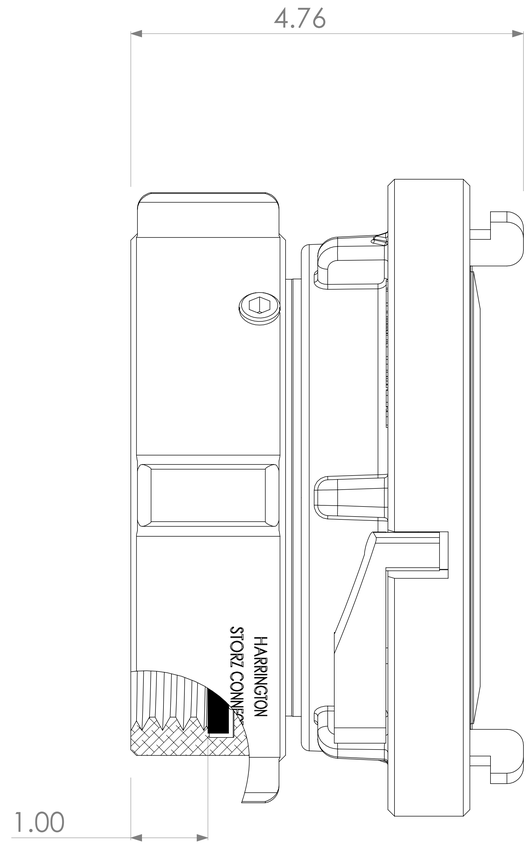

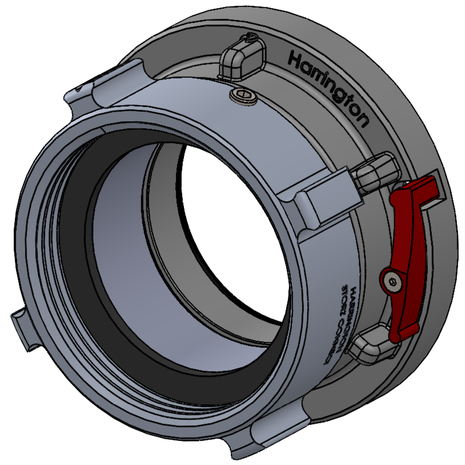

Harrington
STORZ CONNECT

Confidential: No reproduction or sharing without authorization from Harrington Inc.

	NAME	DATE
DRAWN	E-man	1/27/2026

DO NOT SCALE DRAWING	REVISION

HARRINGTON INC.
1-800-553-0078
2630 W 21st, ERIE, PA 16506

TITLE:

Storz Straight Adapter
5" Storz/Lok x 4.5" NH FS R/L

DWG NO. **HSFS50-45NH**	A0
SCALE:1:1	SHEET 1 OF 1